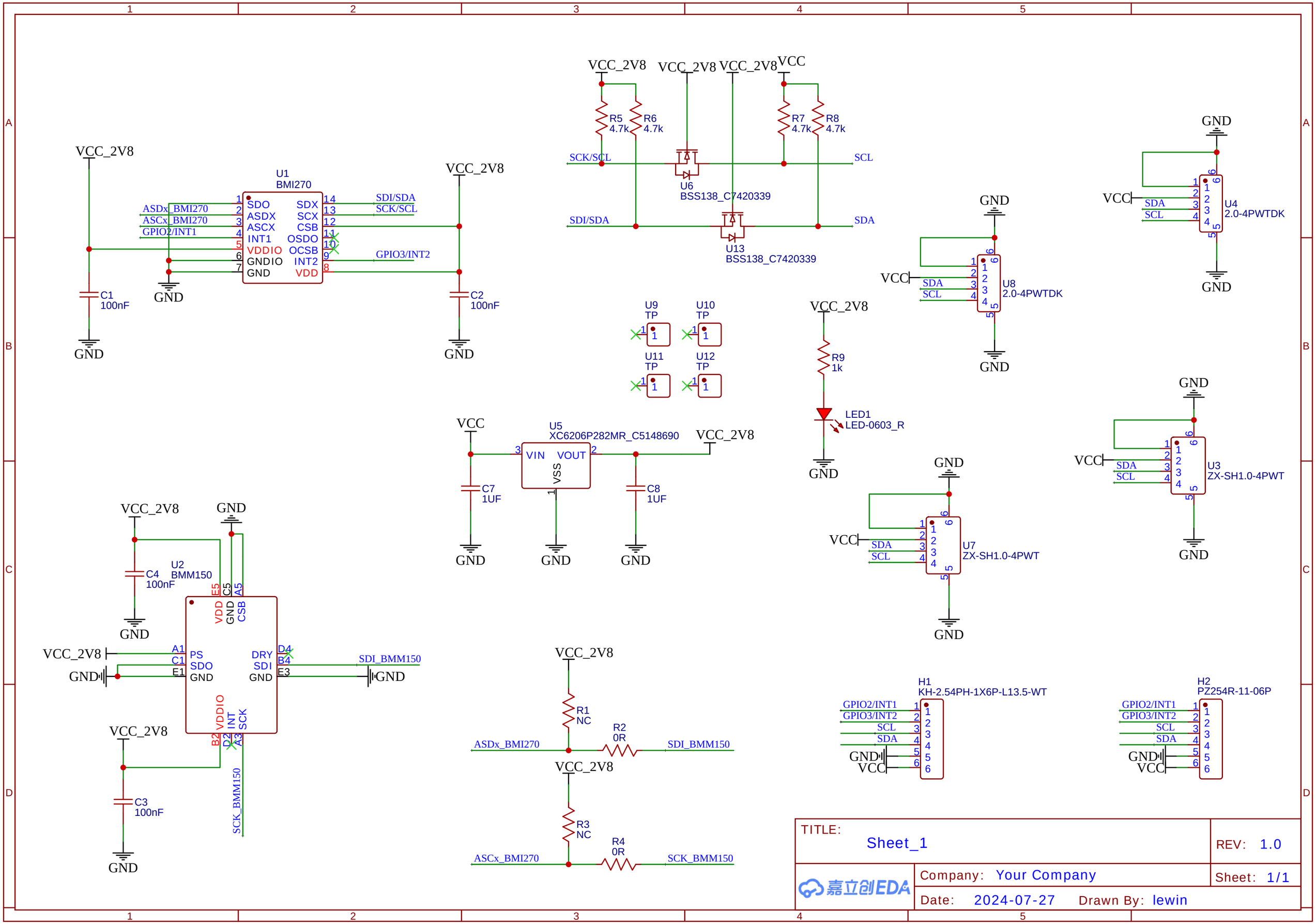
U1
BMI270
SDO
ASDX
ASCX
INT1
VDDIO
GNDIO
GND
SDX
SCX
CSB
OSDO
OCSB
INT2
VDD
ASDx_BMI270
ASCx_BMI270
GPIO2/INT1
SDI/SDA
SCK/SCL
GPIO3/INT2
VCC_2V8
C1
100nF
C2
100nF
GND
R5
4.7k
R6
4.7k
R7
4.7k
R8
4.7k
U6
BSS138_C7420339
U13
BSS138_C7420339
SCL
SDA
U4
2.0-4PWTDK
U8
2.0-4PWTDK
U9
TP
U10
TP
U11
TP
U12
TP
R9
1k
LED1
LED-0603_R
VCC
U5
XC6206P282MR_C5148690
VIN
VOUT
VSS
C7
1UF
C8
1UF
U3
ZX-SH1.0-4PWT
U7
ZX-SH1.0-4PWT
U2
BMM150
C4
100nF
C3
100nF
PS
SDO
GND
DRY
SDI
VDDIO
INT
SCK
SDI_BMM150
SCK_BMM150
R1
NC
R2
0R
R3
NC
R4
0R
H1
KH-2.54PH-1X6P-L13.5-WT
H2
PZ254R-11-06P
TITLE:
Sheet_1
REV: 1.0
Company: Your Company
Sheet: 1/1
Date: 2024-07-27
Drawn By: lewin
嘉立创EDA